GLOBO
LIGHTING
www.globo-lighting.com

40408

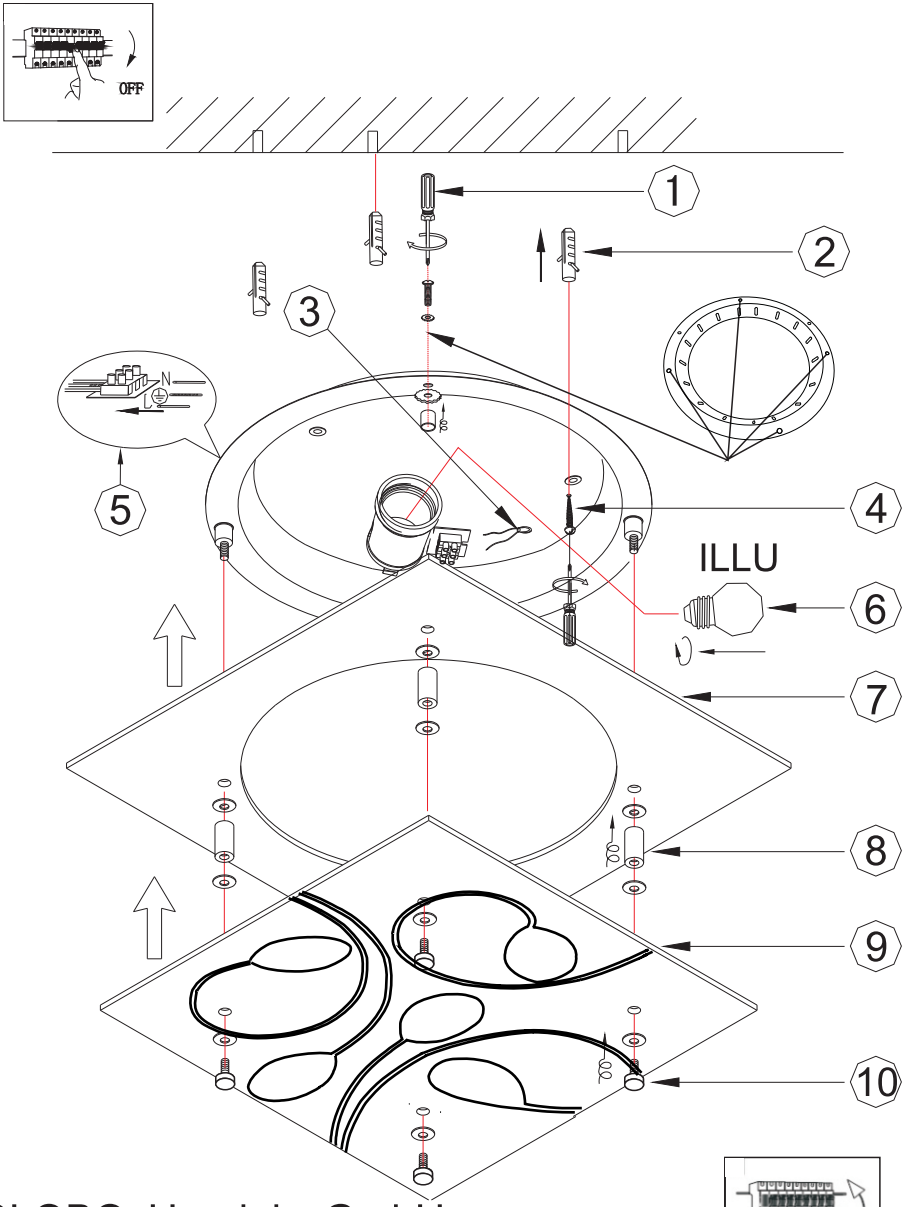

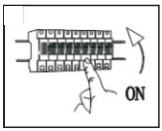

GLOBO Handels GmbH
St.Peter 38 A-9184 St.Jakob/Rosental